4. If a child drags a 8.0 kilogram wagon for 10. meters by using a force of 20. newtons at an angle of 30.º with the horizontal, how much work does he do?

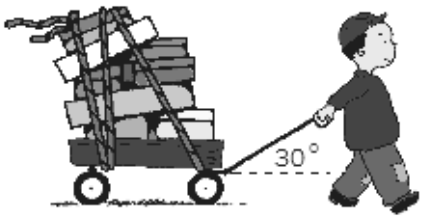

$W_A = F_A\, d \cos\theta = (20\text{ N})(10.\text{ m}) \cos 30^o = 173\text{ J}$

---

5. A student carries 150. newtons worth of books 10. meters up a flight of stairs which are inclined at an angle of 30^0 from the horizontal. How much work does he do?

Two methods – be careful of the angle

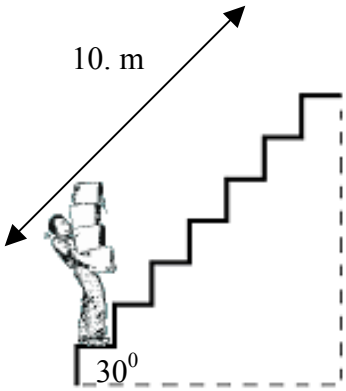

$W_A = F_A\, d \cos\theta$
$= (150\text{ N})\,(10.\text{ m}) \cos 60^0$
$= (150.\text{ N})(5.0\text{ m})$
$= 750\text{ J}$

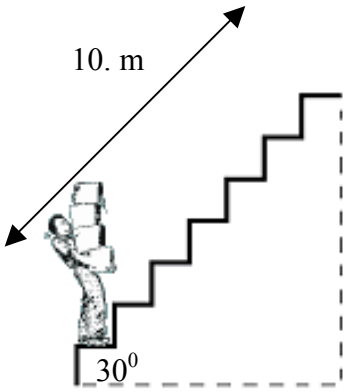

$d_y = d \sin\theta = (10\text{m}) \sin 30^o = 5.0\text{m}$

$W_A = F_A\, d_y \cos\theta = (150.\text{ N})(5.0\text{ m}) \cos 0^o = 750\text{ J}$

---

6. How much work is done on a 120.-kilogram satellite as it orbits the Earth?

$W_g = F_g\, d \cos\theta = F_g\, d \cos 90^o = 0$

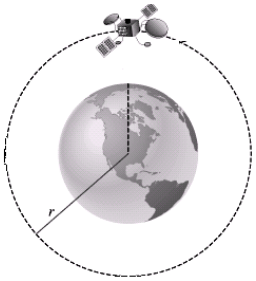

Work and Efficiency

Efficiency: the ratio of the amount of useful work done to the amount of total work done

Formula:

$$eff = \frac{\text{useful out}}{\text{total in}}$$

1. An electric motor has an input power of 160 W. In raising a load, 120 W of power are dissipated. What is the efficiency of the motor?

25%

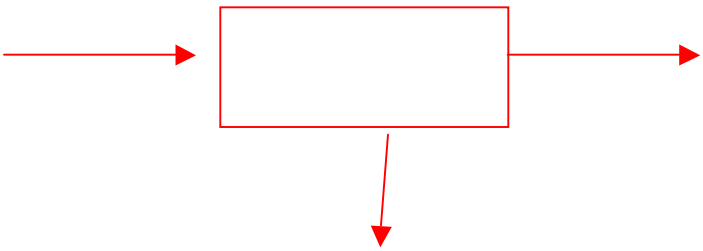

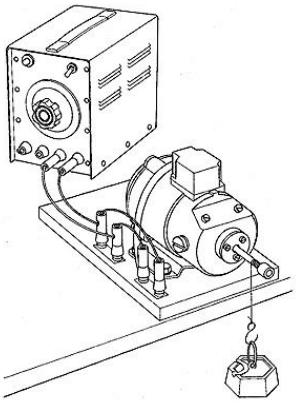

2. A student does 400. J of work using a pulley to raise a 72 N box to a height of 5.0 meters.

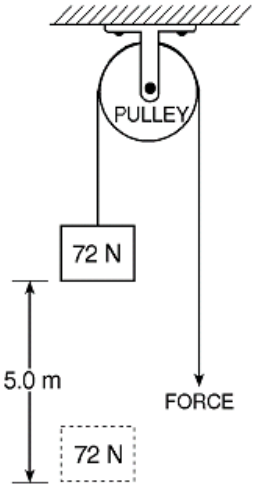

a) How much work does the student do against gravity?

$W_g = F_g\, d = (72N)(5.0\ m) = 360\ J$

b) How much work does the student do against friction?

$W_T = W_g + W_f$
$400\ J = 360\ J + W_f$
$W_f = 40\ J$

c) How efficient is this pulley?

Eff = Useful out/total in = 360 J/400 J
Eff = 0.90 = 90.%

3. A 160.-newton box is pulled to the top of a frictionless ramp at constant speed as shown in the diagram. Calculate the amount of work done.

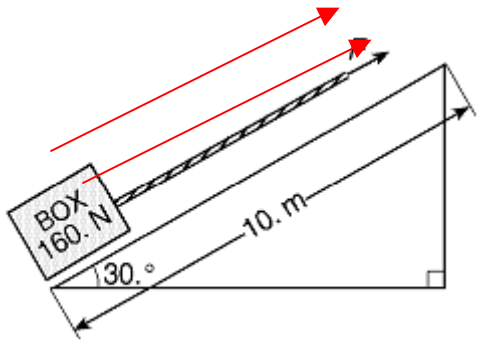

$Fg_{||} = Fg \sin\theta = (160\ N) \sin 30^o = 80\ N$

$W_g = F_{g||}\ d \cos\theta = (80.\ N)(10\ m) \cos 0^o = 800\ J$

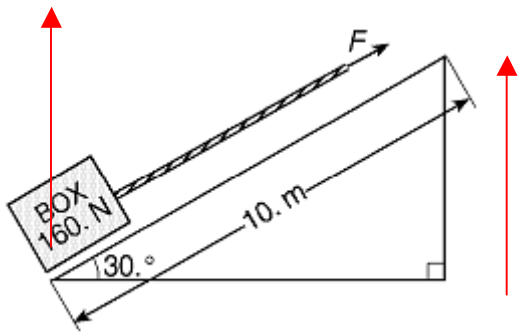

$d_y = d \sin\theta = (10m) \sin 30^o = 5.0m$

$W_g = F_g\ d_y \cos\theta = (160.\ N)(5.0\ m) \cos 0^o = 800\ J$

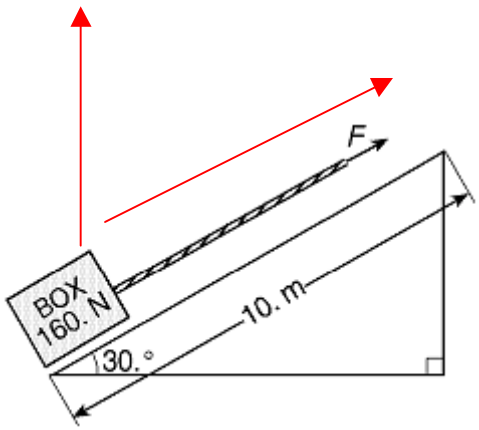

$W_g = F_g\ d \cos\theta = (160.\ N)(10\ m) \cos 60^o = 800\ J$

---

4. Compare the amount of work needed to get this box to the top of the hill by either lifting it or dragging it up the incline if:

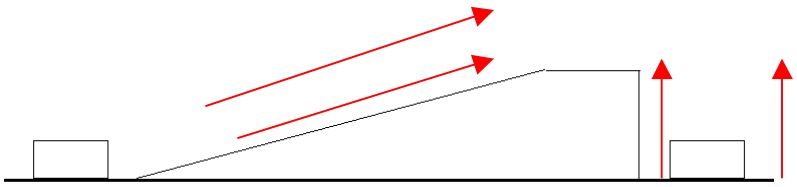

a) the incline is frictionless

Same work

W = W
F D = F d

b) the incline is not frictionless

Lifting is the same
Dragging is more work since more force needed

Path Independent: In the absence of friction, work done against gravity is independent of the path chosen

5. An 8.0 newton force is used to pull a 10.0 newton box 6.00 meters up a rough hill at constant speed as shown in the diagram.

a) How much work was done pulling the box up the hill?

$\Sigma F_{\parallel} = 0$

$F_{g\parallel} + F_A + F_f = 0$

$-5N \quad 8N$

$F_A \cdot d = 8N \cdot 6m$

$= 48J$

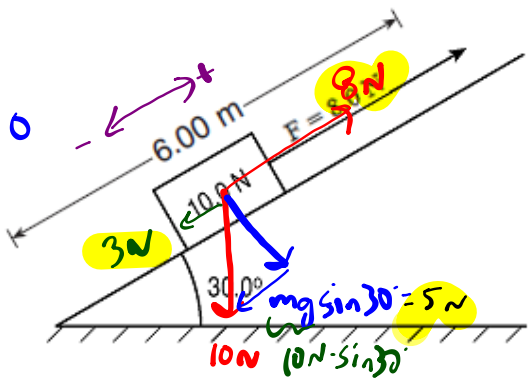

b) How much work was done overcoming gravity?

$F_{g\parallel} \cdot d \qquad 5N \cdot 6m = 30J$

c) How much work was done overcoming friction?

$F_f \cdot d \qquad 3N \cdot 6m = 18J$

d) How efficient is this process?

$\text{eff} = \frac{\text{useful}}{\text{total}} = \frac{30J}{48J} \sim .63$