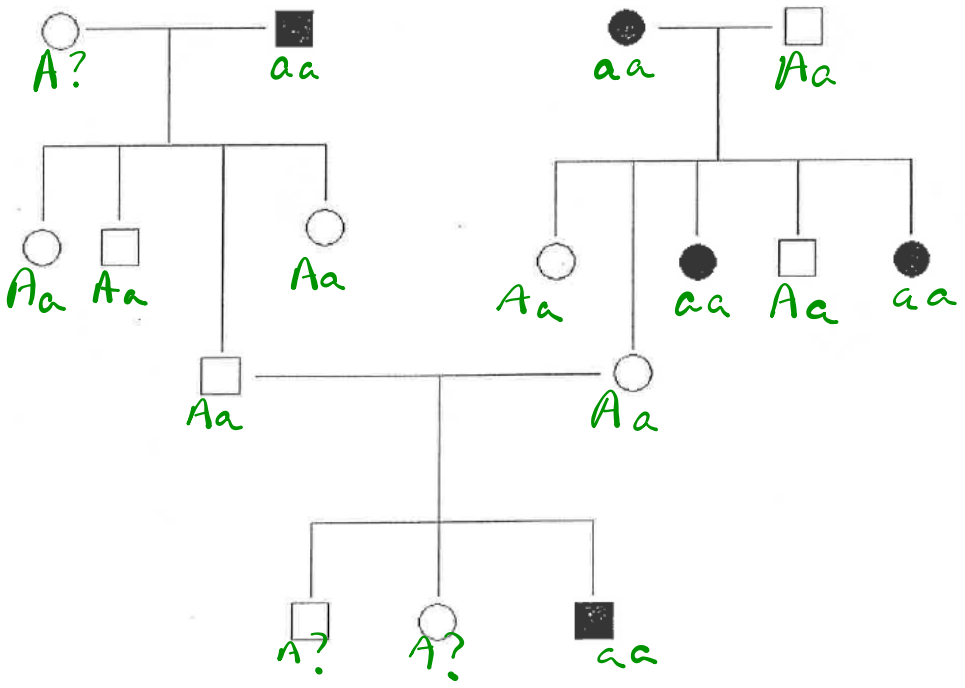
A?
aa
aa
Aa
Aa
Aa
Aa
Aa
aa
Aa
aa
Aa
Aa
A?
A?
aa
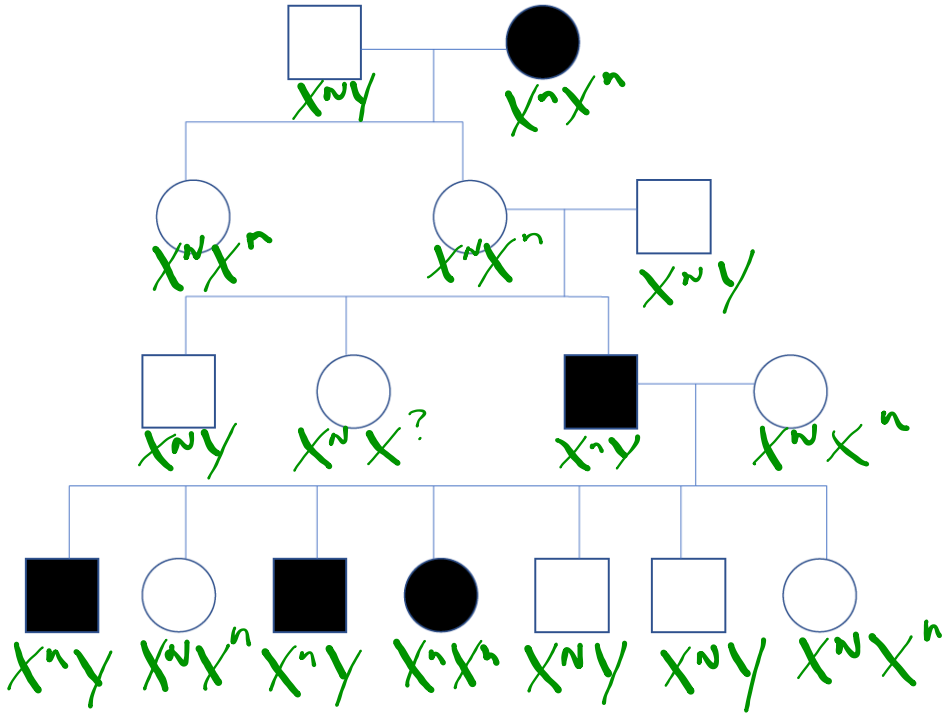
February 23, 2018